Work Order ID 71634

Thursday, July 07, 2011 11:22:22 AM

Item ID: D3255-041 **Accept** **Setup Start** **Stop**

Revision ID:

Item Name: Access Panel Assembly

Start Date: 7/7/2011 **Start Qty:** ~~4.00~~ 3 07.07.08

Required Date: 7/21/2011 **Req'd Qty:** ~~4.00~~ 3

Cust Item ID:

Customer:

Reference:

Run Start **Stop**

Approvals: **Process Plan:** MKF **Date:** 11-07-07 **Tooling:** **Date:**

QC: **Date:** **SPC (Y/N):** **Date:**

Sequence ID/ Work Center ID	Operation Description	Set Up/ Run Hours	Tool ID	Tool #	Plan Code	Accept Qty	Reject Qty	Reject Number	Insp. Stamp
Draw Nbr	**Revision Nbr**								
D3255	Rev B								
100	Large Fab	0.00							
Large Fab									
Large Fab	**Memo**	0.00							
Large Fab	1-Weld as per Dwg D3255 ***purge weld***☐A/R SS ROD Batch: M115778 ☐2-Grind Welds Flush					11.07.11	3		
110	QC10- Inspect visual per QSI004- ground welds	0.00							
QC	**Memo**	0.00							
Quality Control						x3			
120	QC5- Inspect part completeness to step on W/O	0.00							
QC	**Memo**	0.00							
Quality Control						x3			

Dart Aerospace Ltd

W/O:		WORK ORDER CHANGES					
DATE	STEP	PROCEDURE CHANGE	By	Date	Qty	Approval Chief Eng / Prod Mgr	Approval QC Inspector

Part No: _____ **PAR #:** _____ **Fault Category:** _____ **NCR:** Yes No **DQA:** _____ **Date:** _____

Resolution: _____ **Disposition:** _____ **QA: N/C Closed:** _____ **Date:** _____

NCR:		WORK ORDER NON-CONFORMANCE (NCR)						
DATE	STEP	Description of NC Section A	Corrective Action Section B			Verification Section C	Approval Chief Eng	Approval QC Inspector
			Initial Chief Eng	Action Description Chief Eng	Sign & Date			

NOTE: Date & initial all entries

H:\fFORMS\Quality Assurance\approved QA\NCRWO RevE

Work Order ID 71634

Thursday, July 07, 2011 11:22:22 AM

Item ID: D3255-041 **Accept** **Setup Start**

Revision ID:

Item Name: Access Panel Assembly **Stop**

Start Date: 7/7/2011 **Start Qty:** 4.00 **Cust Item ID:**

Required Date: 7/21/2011 **Req'd Qty:** 4.00 **Customer:**

Reference:

Approvals: **Process Plan:** _____ **Date:** _____ **Tooling:** _____ **Date:** _____ **Run Start**

QC: _____ **Date:** _____ **SPC (Y/N):** _____ **Date:** _____ **Stop**

Sequence ID/ Work Center ID	Operation Description	Set Up/ Run Hours	Tool ID	Tool #	Plan Code	Accept Qty	Reject Qty	Reject Number	Insp. Stamp
130	Grey Sandtex(Ref:4.3.5.6) per QSI005 4.3	0.00				3X	Ø	M-L	11/07/12
Powdercoat									
Powder Coating	**Memo**	0.00							
	START TIME: 8:15 ☐OVEN TEMPERATURE: 320°F ☐FINISH TIME: 8:45								
M115128									
140	QC3- Inspect Part Finish	0.00				3	Ø	DR	11-7-12
QC	**Memo**	0.00							
Quality Control									
150	Small Fab	0.00							
Small Fab	**Memo**	0.00							
Small Fab	1-Bond D3255-5 gasaket to d3255-041 using Dow corning adhesive as per Dwg D3255☐A/R 736 DOW CORNING ADHESIVE Batch: M116664					SD	11/07/18		

Dart Aerospace Ltd

W/O:		WORK ORDER CHANGES					
DATE	STEP	PROCEDURE CHANGE	By	Date	Qty	Approval Chief Eng / Prod Mgr	Approval QC Inspector

Part No: _____ **PAR #:** _____ **Fault Category:** _____ **NCR:** Yes No **DQA:** _____ **Date:** _____

Resolution: _____ **Disposition:** _____ **QA: N/C Closed:** _____ **Date:** _____

NCR:		WORK ORDER NON-CONFORMANCE (NCR)						
DATE	STEP	Description of NC Section A	Corrective Action Section B			Verification Section C	Approval Chief Eng	Approval QC Inspector
			Initial Chief Eng	Action Description Chief Eng	Sign & Date			

NOTE: Date & initial all entries

Work Order ID 71634

Thursday, July 07, 2011 11:22:22 AM

Item ID: D3255-041 **Accept** **Setup Start**

Revision ID:

Item Name: Access Panel Assembly **Stop**

Start Date: 7/7/2011 **Start Qty:** 4.00 **Cust Item ID:**

Required Date: 7/21/2011 **Req'd Qty:** 4.00 **Customer:**

Reference:

Approvals: **Process Plan:** _____ **Date:** _____ **Tooling:** _____ **Date:** _____ **Run Start**

QC: _____ **Date:** _____ **SPC (Y/N):** _____ **Date:** _____ **Stop**

Sequence ID/ Work Center ID	Operation Description	Set Up/ Run Hours	Tool ID	Tool #	Plan Code	Accept Qty	Reject Qty	Reject Number	Insp. Stamp
160	QC5- Inspect part completeness to step on W/O	0.00							
QC	**Memo**	0.00							
Quality Control									
170	Identify as per dwg & Stock Location: 182	0.00							
Packaging	**Memo**	0.00							
Packaging									
180	QC21- Final Inspection - Work Order Release	0.00							
QC	**Memo**	0.00							
Quality Control									

8 11/07/18

11/7/18 (3)

11/7/18

11-07-18 (3)

Dart Aerospace Ltd

W/O:		WORK ORDER CHANGES					
DATE	STEP	PROCEDURE CHANGE	By	Date	Qty	Approval Chief Eng / Prod Mgr	Approval QC Inspector

Part No: _____ **PAR #:** _____ **Fault Category:** _____ **NCR:** Yes No **DQA:** _____ **Date:** _____

Resolution: _____ **Disposition:** _____ **QA: N/C Closed:** _____ **Date:** _____

NCR:		WORK ORDER NON-CONFORMANCE (NCR)						
DATE	STEP	Description of NC Section A	Corrective Action Section B			Verification Section C	Approval Chief Eng	Approval QC Inspector
			Initial Chief Eng	Action Description Chief Eng	Sign & Date			

NOTE: Date & initial all entries

Picklist Print

Thursday, July 07, 2011 11:22:19 AM

Work Order ID: 71634

Parent Item: D3255-041

Parent Item Name: Access Panel Assembly

Start Date: 7/7/2011 **Required Date:** 7/21/2011

Start Qty: 4.00 **Required Qty:** 4.00

Comments: IPP Rev:C Removed Manufacturing of D3255-1/-2/-3 06-08-02 JLM

Component Item ID/ Item Name	Replacement Item ID	Mfg/ Purch	Bin Item	Primary Location	Last Location	Route Seq ID	Unit of Measure	Qty on Hand	Qty per Kit	Total Qty	Qty Issued	Date Issued	Status
D3255-1		Manufactured	No			100	Each	3.0000	1	3		11.07.14	
Panel													
				Location		**Loc Qty**		**Loc Code**					
				WA		3							
				68782		3				3			
D3255-5		Manufactured	No			100	Each	8.0000	1	3		SD 11/07/14	
Gasket													
				Location		**Loc Qty**		**Loc Code**					
				GA		8							
					68783	8				3			
D3255-3		Manufactured	No			150	Each	11.0000	1	3		11.07.14	
Cap													
				Location		**Loc Qty**		**Loc Code**					
				WA021		11							
				66812		11				3			

Dart Aerospace Ltd

W/O:		WORK ORDER CHANGES					
DATE	STEP	PROCEDURE CHANGE	By	Date	Qty	Approval Chief Eng / Prod Mgr	Approval QC Inspector

Part No: _____ **PAR #:** _____ **Fault Category:** _____ **NCR:** Yes No **DQA:** _____ **Date:** _____

Resolution: _____ **Disposition:** _____ **QA: N/C Closed:** _____ **Date:** _____

NCR:		WORK ORDER NON-CONFORMANCE (NCR)						
DATE	STEP	Description of NC Section A	Corrective Action Section B			Verification Section C	Approval Chief Eng	Approval QC Inspector
			Initial Chief Eng	Action Description Chief Eng	Sign & Date			

NOTE: Date & initial all entries

DESIGN	DRAWN BY	DART AEROSPACE LTD HAWKESBURY, ONTARIO, CANADA	
CHECKED	APPROVED	DRAWING NO. D3255	REV. B SHEET 1 OF 4
DATE 04.12.06		TITLE ACCESS PANEL ASSEMBLY	SCALE 1:6

A	04.01.27	NEW ISSUE
B	04.12.06	D3255-3 REDESIGN; ADDED ø0.098

RELEASED
05-01-18

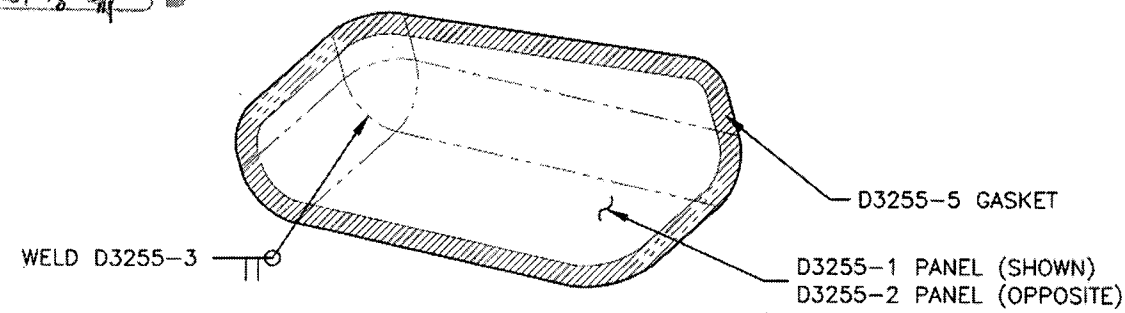

D3255-041 ACCESS PANEL (SHOWN)
D3255-042 ACCESS PANEL (OPPOSITE)

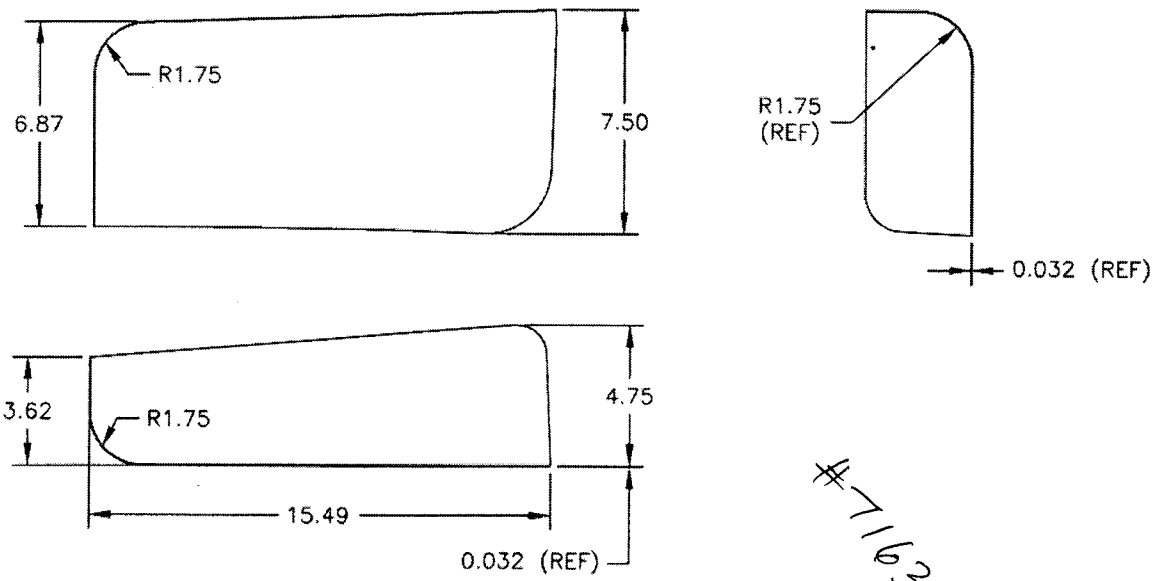

#71634

D3255-1 BEND DETAIL
D3255-2 OPPOSITE

D3255-041/-042 NOTES:
1) WELD PER DART QSI 004
2) FINISH: POWDER COAT GREY SANDTEX (4.3.5.6) PER QSI 005 4.3
3) INSTALL D3255-5 GASKET USING DOW CORNING P/N 736 ADHESIVE IN ACCORDANCE WITH MANUFACTURE'S INSTRUCTIONS
4) IDENTIFY WITH P/N & B/N USING FINE POINT PERMANENT MARKER

Dart Aerospace Ltd

W/O:		WORK ORDER CHANGES					
DATE	STEP	PROCEDURE CHANGE	By	Date	Qty	Approval Chief Eng / Prod Mgr	Approval QC Inspector

Part No: _____ **PAR #:** _____ **Fault Category:** _____ **NCR:** Yes No **DQA:** _____ **Date:** _____

Resolution: _____ **Disposition:** _____ **QA: N/C Closed:** _____ **Date:** _____

NCR:		WORK ORDER NON-CONFORMANCE (NCR)						
DATE	STEP	Description of NC Section A	Corrective Action Section B			Verification Section C	Approval Chief Eng	Approval QC Inspector
			Initial Chief Eng	Action Description Chief Eng	Sign & Date			

NOTE: Date & initial all entries

DESIGN	DRAWN BY	DART AEROSPACE LTD HAWKESBURY, ONTARIO, CANADA	
CHECKED	APPROVED	DRAWING NO. D3255	REV. B SHEET 2 OF 4
DATE 04.12.06		TITLE TITLE	SCALE 1:1

RELEASED
05.01.18

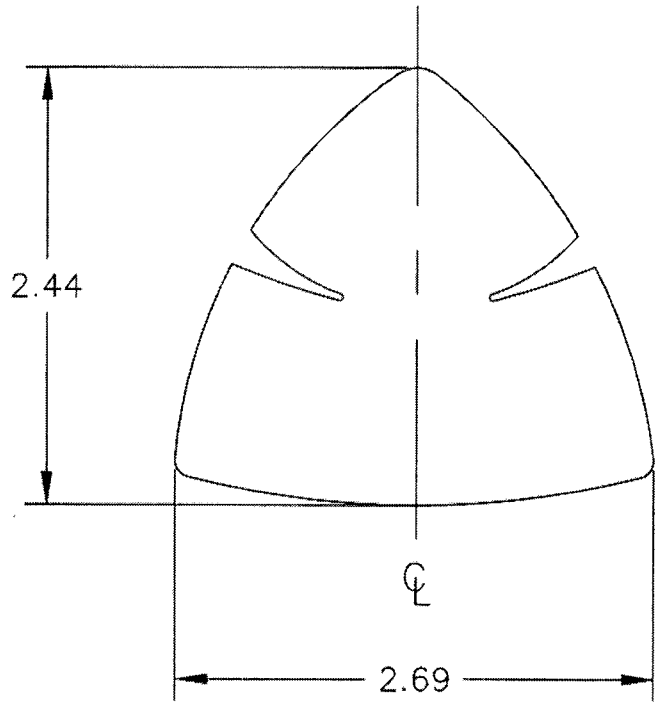

D3255-3 CAP
FORM TO FIT D3155-1/-2

#71634

D3255-3 NOTES:

1) MATERIAL: AISI 304/316 SS 0.032 THICK (REF. M304S22GA)
2) TOLERANCES ARE PER DART QSI 018 UNLESS OTHERWISE NOTED
3) ALL DIMENSIONS ARE IN INCHES
5) BREAK ALL SHARP EDGES 0.005 TO 0.010
6) MAKE PER DRAWING "D3255-B2.DWG"

Dart Aerospace Ltd

W/O:		WORK ORDER CHANGES					
DATE	STEP	PROCEDURE CHANGE	By	Date	Qty	Approval Chief Eng / Prod Mgr	Approval QC Inspector

Part No: _____ **PAR #:** _____ **Fault Category:** _____ **NCR:** Yes No **DQA:** _____ **Date:** _____

Resolution: _____ **Disposition:** _____ **QA: N/C Closed:** _____ **Date:** _____

NCR:		WORK ORDER NON-CONFORMANCE (NCR)						
DATE	STEP	Description of NC Section A	Corrective Action Section B			Verification Section C	Approval Chief Eng	Approval QC Inspector
			Initial Chief Eng	Action Description Chief Eng	Sign & Date			

NOTE: Date & initial all entries

H:\fFORMS\Quality Assurance\approved QA\NCRWO RevE

DESIGN	DRAWN BY	DART AEROSPACE LTD HAWKESBURY, ONTARIO, CANADA	
CHECKED	APPROVED	DRAWING NO. D3255	REV. B SHEET 3 OF 4
DATE 04.12.06		TITLE ACCESS PANEL ASSEMBLY	SCALE 1:5

RELEASED
05-01-18

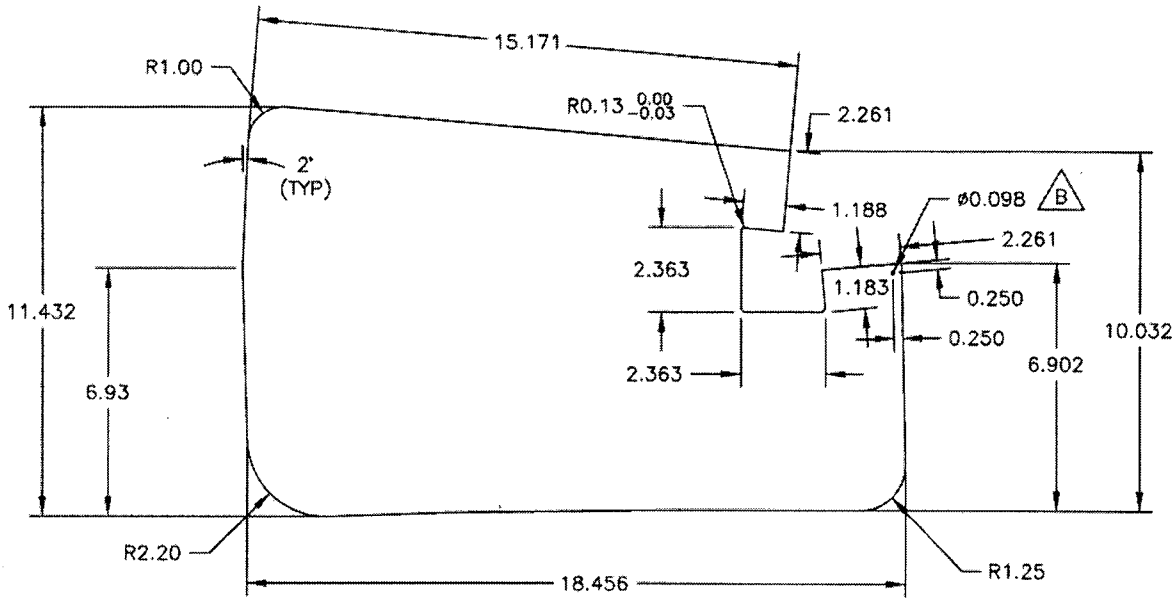

D3255-1/-2 FLAT PATTERN

#71634

D3255-1/-2 NOTES:

1) MATERIAL: AISI 304/316 SS 0.032 THICK (REF. M304S22GA)
2) TOLERANCES ARE PER DART QSI 018 UNLESS OTHERWISE NOTED
3) ALL DIMENSIONS ARE IN INCHES
4) BREAK ALL SHARP EDGES 0.005 TO 0.010

Dart Aerospace Ltd

W/O:		WORK ORDER CHANGES					
DATE	STEP	PROCEDURE CHANGE	By	Date	Qty	Approval Chief Eng / Prod Mgr	Approval QC Inspector

Part No: _____ **PAR #:** _____ **Fault Category:** _____ **NCR:** Yes No **DQA:** _____ **Date:** _____

Resolution: _____ **Disposition:** _____ **QA: N/C Closed:** _____ **Date:** _____

NCR:		WORK ORDER NON-CONFORMANCE (NCR)						
DATE	STEP	Description of NC Section A	Corrective Action Section B			Verification Section C	Approval Chief Eng	Approval QC Inspector
			Initial Chief Eng	Action Description Chief Eng	Sign & Date			

NOTE: Date & initial all entries

DESIGN	DRAWN BY	DART AEROSPACE LTD HAWKESBURY, ONTARIO, CANADA	
CHECKED	APPROVED	DRAWING NO. D3255	REV. B SHEET 4 OF 4
DATE 04.12.06		TITLE ACCESS PANEL ASSEMBLY	SCALE 1:5

RELEASED
05 01.18

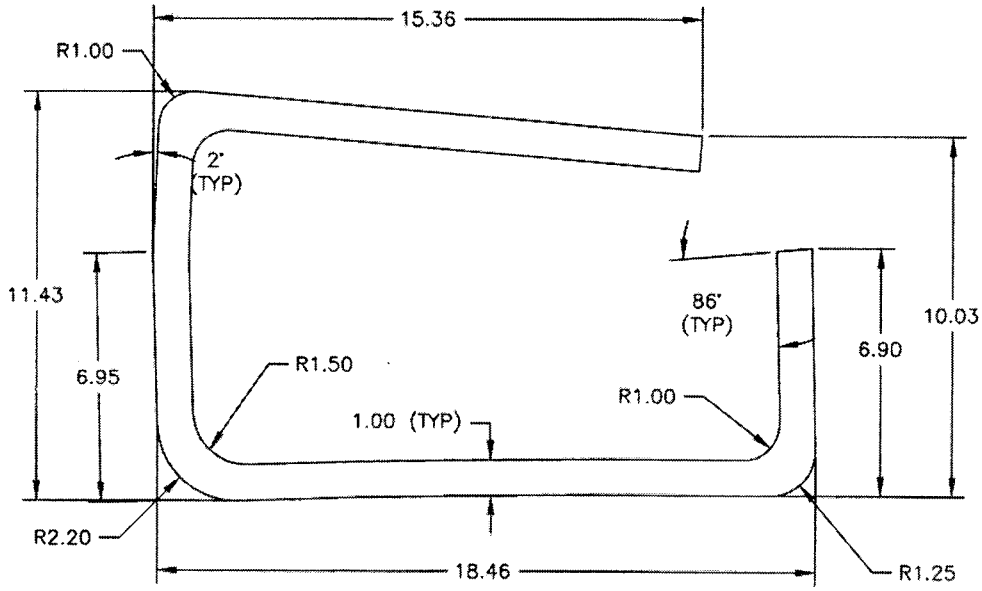

D3255-5 GASKET

#71634

D3255-5 NOTES:
1) MATERIAL: SILICONE COATED FIBERGLASS CLOTH PER AMS 3320F
P/N SIL/F 36x36x1/16
POSSIBLE SUPPLER: AVIALL
2) TOLERANCES ARE PER DART QSI 018 UNLESS OTHERWISE NOTED
3) ALL DIMENSIONS ARE IN INCHES

Dart Aerospace Ltd

W/O:		WORK ORDER CHANGES					
DATE	STEP	PROCEDURE CHANGE	By	Date	Qty	Approval Chief Eng / Prod Mgr	Approval QC Inspector

Part No: _____ **PAR #:** _____ **Fault Category:** _____ **NCR:** Yes No **DQA:** _____ **Date:** _____

Resolution: _____ **Disposition:** _____ **QA: N/C Closed:** _____ **Date:** _____

NCR:		WORK ORDER NON-CONFORMANCE (NCR)						
DATE	STEP	Description of NC Section A	Corrective Action Section B			Verification Section C	Approval Chief Eng	Approval QC Inspector
			Initial Chief Eng	Action Description Chief Eng	Sign & Date			

NOTE: Date & initial all entries